SECRET

GUARD

COPY No. 213

~~434~~

69/92

0
21/12/06

466/06/010

MINISTRY OF SUPPLY

ARMAMENT RESEARCH ESTABLISHMENT

SYMPOSIUM
ON
THE PHYSICAL EFFECTS OF ATOMIC WEAPONS

PAPER No. 10

Observations of the Delayed Gamma Radiation as a function of time in Tests ABLE and BAKER at BIKINI

J. L. Tuck

AVIA65

SECRET

THIS DOCUMENT IS THE PROPERTY OF H.B.M. GOVERNMENT, and is intended only for the personal information of

____

____

and of those officers under him whose duties it affects. He is personally responsible for its safe custody and that its contents are disclosed to those officers and to them only.
The document will be kept under lock and key when not in actual use.

~~B.14~~

Observations of the Delayed Gamma Radiation as a Function of Time in Tests ABLE and BAKER at BIKINI

J.L. Tuck

Summary

The intensity of gamma radiation in tests Able and Baker was measured by an ionization chamber recording equipment over the period from one second to several hours after the explosion and at several points throughout the ship array.

In the air shot the gamma rays came as an intense burst falling off at a rate such that half the total dose was received in the first second. This observed variation of gamma ray intensity is roughly compatible with a hypothesis that most of the fission products stay in the ball of fire, emitting delayed gamma rays at the rate observed in the laboratory. Intensity after the first minute was small on account of the low residual contamination.

In the underwater shot the initial burst of intensity was negligible, the main part of the dose being received during the sustained rise of intensity attributable to the return of fission products to the vicinity of the ships as rain and mist. In this case the time to half dose was from 8 to 20 minutes. A high degree of local contamination was produced.

Estimates of gamma dose were found to agree with independent estimates made by the radiological group from similarly located films.

Tactically the dosage rates are such that, in an ABLE type attack, exposed personnel could benefit by prompt dodging behind a shield while, in a BAKER type attack, personnel would have ample time to take cover; ships with steam up could reduce the dose by moving away.

TABLE OF CONTENTS

Page

Introduction

Our knowledge of the gamma ray phenomenon associated with atomic bombs showed some gaps and some contradictions when the Able and Baker shots were being planned. It was decided, therefore, to supplement the usual gamma ray film measurements at the Crossroads operation with gamma ray time measurements. The purpose of these latter was to give information on the contribution to the gamma ray dose from such various factors as (1) direct radiation from the fission product cloud, (2) ship contamination, (3) water-borne contamination, (4) wind-borne contamination. Information would also be obtained on the possibility of taking evasive action from the radiation and, should the local contamination be strong, the time record might supply a key to the interpretation of the film records.

Experimental

1. General

An experiment of this kind requiring measurement of a time varying quantity on a number of isolated and widely distributed ships seems to fall into two patterns involving either the large effort with gamma ray detection on the ships and radio transmission of data to a remote recording station achieving perhaps microsecond resolving power, or the smaller effort with rather simple completely self contained recording units, necessarily battery operated, of more modest performance.

Time for preparation was such that strict simplification of even the second procedure was necessary. Requirements were set at:-

(1) No film recording, because of risk of fogging.

(2) Apparatus not primarily dependant on triggering by radio signal.

(3) Apparatus capable of remaining in a receptive state for several days in order to be able to tolerate a postponement of firing day without reservicing.

(4) Protection from blast, ship motion and tropical humidity.

(5) Ability to record a wide range of gamma intensities.

The resulting apparatus, illustrated in Fig.2, is in essence an ionization chamber which, via an amplifier, activates in a manner proportional to the logarithm of the gamma ray intensity the pen of a recorder which writes in ink on a chart driven by clockwork. The chart is advanced at the slow rate of 1/10 inch per minute with enough chart to run for 7 days. In its final form a radio triggering equipment introduced a 60 fold improvement in resolving power without sacrificing reliability, by actuating a change speed mechanism increasing the chart speed to 6 inches per minute and giving a total running time of 3 or 4 hours. The equipment was enclosed in an airtight Dural drum and mountable by a single point suspension.

2. The Chamber

These were of a type designed for electron collection. They had a 3 inch diameter 12 inch long brass tubular envelope and a 15 mil central wire electrode passing through hermetic seals with guard rings. The chambers were filled to a total pressure of 3 atmospheres with argon + 2% CO_2. These chambers were found to be very reliable and similar in their preoprties, doubtless on account of the long experience and production methods used in their manufacture. High tension supply at 2,000 V was supplied from a specially made compact dry battery (W3). The electrical properties of the chambers are described more fully in Figs. 3, 4, and 5 and under "calibration".

3. The Amplifier

From calculations of the gamma ray intensities expected the maximum intensity to be recorded was set at 100,000 R/hr. and the minimum, estimated to be a safe background intensity for inspection and recovery, at 1R/hr, giving a ratio of 10^5. This, together with the known chamber sensitivity, set the amplifier requirement as an input range from 4.10^{-10}A to 4.10^{-5}A with an output from 0 to 3 m.a. through a resistance of 1,400 ohms. We are indebted to Dr.R.Watts who was able to develop for this work a battery operated D.C. amplifier having very satisfactory logarithmic properties. This amplifier (Fig. 1a) consisted basically of a high insulation cathode follower (959) used in a well known circuit feeding into a two triode balanced bridge circuit which developed the required power output.

The input signal to the cathode follower consisted of the potential developed by the ionization current across the variable anode cathode resistance of a miniature triode, V32. This resistance was lowered as the input signal increased by connecting the grid of the V32 to the output of the cathode follower. The effect of this direct current negative feedback was to give an amplifier sensitivity which decreased with increasing signal input in a manner dependent on the properties of the impedance tube, its bias and the operating conditions of the 959 cathode follower. In our case, when the logarithm of the current input was plotted against the output deflection, a satisfactory S shaped curve was obtained covering an input range of 5 decades. At first the amplifier sensitivity was found to be too high for small signals and it was found possible to adjust the initial sensitivity to a convenient level by shunting the V32 impedance tube by a 1.5×10^8 ohms. resistance.

Since the amplifier output is in terms of the logarithm of a current the amplifier could not be tested by a voltage generator and a current signal generator was therefore designed, known as the initiation chamber (Fig. 1b) which proved to be a great convenience in testing. This, consisting of a 250 V battery potentiometer and a set of high resistances, provided graduated currents in roughly equal steps of log i from 1 to $25,000 \times 4 \times 10^{-10}$ amperes.

4. Recorder

It was important in selecting the recording instrument to take account of the effect of the underwater shock transmitted through the ships' structure and of the violent pitching expected due to wave and blast effects from the bomb. Of the many types of instruments recording on paper some, using electro-chemical or hot wire stylus recording methods and free from ink spilling difficulties, were not procurable in time, while others used robust potentiometric balancing, e.g. Micromax, but required alternating current main power which was not expected to be available. The greater part of the available battery space for the recorder was found to be taken up by the recorder driver stage requirements, so that economy in the power used by the recorder movement was a consideration. A high sensitivity Esterline Angus movement requiring 1 m.a. full scale proved to be too sensitive to pitching and rolling of the kind expected on shipboard. At the suggestion of the makers a restoring spring of increased stiffness was adopted in such a movement, which reduced the current sensitivity to 3 m.a. full scale and the period to 0.2 seconds. This modified movement was found by experiment to be very insensitive to the anticipated pitching and rolling, while the battery requirements remained within acceptable limits.

5. The Can and Mounting

It proved possible to accommodate the foregoing equipment inside a cylinder of 20 inches diameter and 39 inches length. The equipment was mounted on a rack bolted to a top plate; a $\frac{1}{8}$ inch thick dural can, fitted with clamps, was arranged to enclose the equipment and form an airtight seal with a rubber gasket at the top by a contrivance (Fig.2.) similar to the lid of some types of pressure cooker.

The suspension was formed from steel bar having a hinge allowing swinging in all directions in a horizontal plane. The direct transmission of shock down the suspension was reduced by interposing a layer of rubber between the surfaces of the hinge so that there existed no metal to metal contact between the two members across the hinge. An additional feature was the adoption of a lead strip spanning the hinge which, being flexed plastically by bending at the hinge, provided damping. This lead link was found to have worn out in some cases after the ABLE test, showing that much oscillation energy had been absorbed.

6. Radio Change Speed Control

The change speed on the clock was actuated by the movement of a small lever. This lever was retained in the slow speed position by a fine steel wire link held in tension by a spring. When the relay contacts closed in the radio unit 18 volts were applied to the steel wire which fused and allowed the lever to move over to the high speed position.

7. Calibrations

Using the signal generator of Fig.1b, the current sensitivity of the amplifiers was adjusted and calibrated at 23 points covering the range 4.10^{-10}A to 10^{-5}A, corresponding to an anticipated range on the chamber of 1 to 25,000 R/hr. Specimen curves for units Nos. 11 and 10 are seen in Figs. 3 and 4. In order to minimise correction for battery decline such a curve was run on each unit in its ship installations 12 hours before the shot and, when possible, a similar record was made on each unit on re-entry after the shot. After BAKER, in some cases, the background contamination on the ship made it advisable to postpone these final calibrations until the unit had been removed and returned to the laboratory ship in order to keep the dosage of the operators within the legal gamma dose of 0.1 R per day. By reference to previously prepared curves of amplifier sensitivity against time, a small correction for battery decline over the 12 hours interval between calibration and firing was applied.

Radiation Calibration

An accurate calibration at one intensity, 5.75 R per hour, was made on each completed unit using a 2 gram source of radium and making a direct comparison in each case with a standard Victoreen chamber mounted in a position as closely as possible coincident with the ionization chamber of the unit. The results of this showed that the chambers were, within the experimental error, alike; all variations from unit to unit, amounting to about 20%, were accountable from variations in the previously made amplifier sensitivity curves. In addition to the above a calibration was made on one unit up to 100 R/hour with 2 gm. radium and using an inverse square law method.

After Bikini we were able to make a direct calibration at gamma ray intensities up to 77,000 R/hr. The resulting R/deflection curves are shown for standard and special chambers in Figs. 3 and 4 and the decline in sensitivity of the normal chamber which was found at high intensities is plotted in Fig.5. The special chamber development arose in the following way: As direct calibrations at high intensities were not expected to be available, calibration depended on the extrapolation from 100 R/hr. up to 100,000 R/hr. Misgivings being felt about the justification of such an extrapolation, in the time available between tests ABLE and BAKER two chambers were modified on the ship to give higher collecting fields and lower charge densities. To do this, the central 15 mil wire was replaced by a $1\frac{1}{2}$ inch diameter cylinder and the gas pressure reduced from 3 to 1 atmospheres of A + 2% CO_2. The plan was to install these chambers, having more linear characteristics, alongside normal chambers at selected points in test BAKER, in order to obtain a check on the calibration of the normal chambers at high intensities. The basis for the original misgivings is plainly seen to be justified from Fig. 5, in which at 77,000 R/hr. the normal chamber sensitivity is seen to have declined by a factor of 20.

However, the twin installations of normal and special chambers in test BAKER provide a convenient check on experimental accuracy as both types of chamber being calibrated, the two records obtained should yield identical intensity time curves. The extent to which this is true is seen in Fig.7 where, on the curve for the APA 70 upper installation which is such a twin, the points from both records are seen to lie close together. Another feature of this twin record is that the effects of ship motion on the recorders must have been small since they were mounted in such a way that the two recorders would have been affected dissimilarly by rolling and pitching. Only one such twin record was obtained although two twin installations were made; the normal unit of the other pair gave no record on account of an ink failure.

Clock Calibration

The **chart** speeds of all the recorders were checked at low and high speeds and found to be within 5% of rated values except with nearly run down springs. This latter reservation does not effect any of the useful parts of the records obtained in tests ABLE and BAKER.

Installational

1. Test ABLE

In general the plan for ABLE included installations at various distances from the target point on an E-W line up and downwind of the burst. The units were not intended to withstand the direct blast pressure from the bomb at operating distances and were, therefore, always installed in closed ship compartments. These locations were chosen to have as far as possible light and calculable screening between the unit and the bomb. In fact, the unexpected point of detonation in ABLE increased the screening in most cases, especially on the Pensacola and Nagato. A deep installation, coinciding with a below deck installation on the APA 69, was intended to detect water screening effects, but this ship was sunk.

Installational data for ABLE is given in Table 1.

2. Test BAKER

Profiting from the lessons of test ABLE, installations in BAKER were modified to reduce the uncertainty of screening. In the downwind APA upper locations units were placed far forward in the bows, i.e., in the part of the ship nearest to the bomb, in order to minimise screening by heavy ship machinery. Also, a deep installation was made on APA 70, as far down and as nearly vertically below the upper installation as possible, with a view to detecting water screening and water contamination effects. This latter installation, though difficult to service on BAKER minus one day on a battened down and abandoned ship, yielded an acceptable record. It would be idle to enlarge on the installations which were lost due to sinking, although it is to be regretted that neither the installation in the interior of the Nagato Turret, having 11 inches of armour screening, nor its lightly screened companion on the same ship were recovered. Installational data for BAKER are given in Table 2.

Table 1

Installational Data. Test ABLE

Pensacola	CA-24. Cruiser. Approximate bearing of bomb with respect to ship, 150 degrees. Horizontal distance from bomb. 750 yards. Upwind from bomb. In compartment A-203-3L. Officers' Galley Estimated screening - 2 barbettes - ~ 12 inch steel Radio controlled unit
Nagato	Heavy Battleship. Approximate bearing of bomb with respect to ship, 180 degrees. Horizontal distance from bomb. 850 yards Upwind from bomb. In starboard side of after tower on 01 deck, frame number 190 Estimated screening - tower members 3 inch - 6 inch steel. Radio controlled unit
APA 70 Carteret	Troop Transport. Approximate bearing of bomb with respect to ship, 190 degrees. Horizontal distance from bomb. 1,700 yards. Upwind from bomb In after troop berthing compartment number 1-134-1, c-201-L on centre line Estimated screening - oblique bulkheads and pipes 1 inch - 3 inch steel.
APA 68	Troop Transport. Approximate bearing of bomb with respect to ship, 90 degrees. Horizontal distance from bomb, 2,000 yards Downwind from bomb Installation as on APA 70 Estimated screening - bulkheads and pipes 1 inch - 2 inch steel.

Table 2.

Installational Data. Test BAKER

APA 77 Crittenden	Troop Transport. Bearing of bomb - not known but ahead Horizontal distance from bomb, 1,700 yards. Downwind from bomb In forward Troop Head. 1-17-1 - A - 1021-L port side Estimated screening - 1 inch - 2 inch steel Radio controlled unit
APA 70 Carteret	Troop Transport. Bearing of bomb - not known but ahead Horizontal distance from bomb, 3,200 yards Downwind from bomb Same location as above Estimated screening - 1 inch - 2 inch steel

Table 2 (Contd)

Installational Data. Test BAKER

Radio controlled twin unit installation
Also:
Forward GSK stores. 9 foot below water line
Uncontrolled unit.

Table 3.

Integrated Total Gamma Ray Dosages and Comparison with Film Results

Test ABLE

Ship	Pensacola	Nagato	APA 70	APA 68
Distance from bomb in yards	750	850	1700	2000
Total dose in R by integration of our I(t) curve, using theory for 0-2 sec.	77	280	17.2	1.6
Open air dose as calculated from radiological film results (Dessauer)	5400	2900	130	27
Factor: $\frac{\text{Outdoor film dose}}{\text{our dose}} = \epsilon$	70	10	7.6	16.8
Calculated screening thickness of iron for above attenuation taking 1/e thickness as 1.5 inch.	6.5"	3.6"	3.1"	4.2"
Approximate actual screening in inches Fe	12"	3-6"	1-3"	2-4"

Table 4.

Integrated Total Gamma Ray Dosages and Comparison with Film Results

Test BAKER

Ship	APA 77 Upper Location	APA 70 Upper Location	APA 70 Deep Location
Distance from bomb in yards	1700	3200	3200
Total dose in R by integration of our I(t) curve. No theory and neglecting small initial burst	90	31.8	12.6
Total dose from accompanying radiological films (Dessauer)	-	30	15
Total outdoor dose in R.	2900	90	90
Outdoor dose/our dose	32	2.8	7.1
Calculated screening thickness of iron for above attenuation taking 1/e thickness as 1.5 inch	5 ins.	1.5 ins	3 ins.

Table 4 (Contd)

Integrated Total Gamma Ray Dosages and Comparison with Film Results

Test BAKER

Ship	APA 77 Upper Location	APA 70 Upper Location	APA 70 Deep Location
Approximate measured screening in inches Fe	1-2 ins.	1-2 ins.	$\frac{3}{8}$ in. sea water

Results

1. Test ABLE (Figure 6)

From the eight installations made for test ABLE four records were obtained, yielding the final results plotted in Fig.6. (The missing records are accountable as follows - two by sinking, one recorder damaged by shock, one loss by battery failure). For all four recorders the radio control was successful, using the putative minus 20 second time signal which actually turned on the units at minus 3 seconds. Experiments made subsequently showed that this allowed enough time for the chart to reach full speed before detonation.

The rate controlling factor in unit response was the recorder movement with a time constant of 0.2 seconds; as the latter was almost critically damped, the records as given should be taken to be significant (that is within a few per cent. of equilibrium) at times from 1 second after the detonation.

In general the records show a rapidly falling gamma ray intensity for the first twenty seconds followed in the case of the two nearer ships, by an abrupt flattening out to a decay with an approximate half life of 5 minutes. The early part of the curves shows an oscillation of small amplitude with about the same time period as the roll of the ships. As it occurs too early to have been produced by waves, it may be due to the motion of the ships produced by the air blast. Such motion would introduce variations in gamma ray screening at various points in the oscillation.

The most uncertain factor in calculating from these curves is the screening by the ships and the estimates given in Table 3 for the iron screening are approximate, being arrived at from tape measure and ruler measurements on the ships. The unexpected point of detonation in test ABLE resulted in the major part of the Pensacola structure and turrets being interposed between bomb and unit and, on the Nagato, a steel tower structure of uncertain thickness. The heavy screening on the Pensacola at 750 yards is seen to be effective in reducing the intensity observed there below that on the Nagato at 850 yards.

These effects are discussed more fully later.

Results

2. Test BAKER

From the nine installations made for BAKER four records were obtained, yielding the final results plotted in Figs. 7 and 7b. (The five missing records are accountable as follows: - two on Nagato which sank before being cleared by Radiological Safety; one on Apogon, sunk; one on Crittenden, battery failure; one on Carteret, ink failure). Both radio controls were successful.

In general the records show that the initial gamma ray burst which contained all the dose in test ABLE, was smaller and made a negligible contribution to the total dose. The records all showed a minimum within the first two minutes, which was as low as 0.5 R/hr. on the Carteret at 3200 yards, followed by a slow rise and flat maximum at 5 minutes of the order of 200 R/hr. in magnitude preceding a slow decline; all fell below 10 R/hr. after 2 hours.

It is noteworthy that when ships were boarded four days after BAKER Day, although the gamma ray contamination level on deck was 0.25 - 0.5 R/hr. on Carteret and 1 to 1.5 R/hr. on Crittenden, immediately below deck, the gamma ray contamination was only 0.1 R/hr. or less, except where infiltration had taken place. A pool of water lodged in a depression on the deck of the Crittenden had 7 - 8 R/hr. on BAKER + 4 day.

Conclusions

By assuming that the main origin of the observed gamma radiation is the emission of delayed gammas from the fission products of the bomb, which behave as a point source rising in the ball of fire, together with a knowledge of the air absorption co-efficient of the radiation, it is possible to calculate an intensity-time curve. Such a curve was calculated for each of the four distances in test ABLE, using the results of delayed gamma measurements on fission products made in the laboratory (LA 250) and Dessauer's air absorption co-efficienct obtained from the ABLE film data. In this way, four curves are obtained which agree very well in slope with our experimental observations from 1 second to about 20 seconds, (curves so calculated lie from 60 to 70 times higher in magnitude than the observed curves on account of the neglect of screening by the ship). This screening is not known very well, especially as when attempts were made to estimate it, measuring with ruler and tape, difficulties were always encountered with highly variable absorbing objects such as pipes and winches, which could vary the result by a factor of ten.

It seems possible to go some way to avoid this difficulty by making use of the Radiological film data in the following way.

In test BAKER, by which time better liaison had become established, Radiological films were placed in coincidence with the ionisation chamber on some units. Integration of the gamma intensity - time curves obtained from such units gave total doses in good agreement with the independent measurements made by the Radiological Safety Section on the films (Table 4) so that it bacme clear that the two methods were giving consistent results.

Since the slopes of the theoretical intensity time curves were in good agreement with experiment over the interval 1 - 20 seconds, it was decided to trust the theory in the interval from o - 1 second, so that it became possible to obtain a figure for the total dose, $\int_0^\omega I(t)\,dt$, by using the theory to fill in the gap from o - 1 second not recorded by the units. The resulting total doses are tabulated in Table 3 and are seen to be less than the outdoor film doses by a large factor. This factor is taken to be the attenuation factor for the ship screening which, expressed in terms of inches of iron using a mean free path in iron of 1.5 inches, is seen to be in the region of the estimated actual ship screening. The use of the resulting attenuation factors in conjunction with the theoretical outdoor intensity-time curves is seen (Fig.9) to bring the theory into fair agreement with experiment ABLE.

In addition to the rapid fall in gamma ray intensity in the initial gamma ray burst discussed above which continues right down to very low values in the two more distant ships, there is a sudden trailing off on the nearer-in ships, at 20 seconds after detonation, to a lower rate of decay of half life about 5 minutes. The presence of this effect on the nearer-in ships and absence from the far-out ones suggests that it arises from neutron induced activities, though this hypothesis meets with a difficulty. The magnitude of this effect on the two ships appears to be in scale with the gamma ray intensity which is attenuated much more on the Pensacola (~ 70 times) than on the Nagato (~ 10 times). However, a neutron induced radiation on account of the diffusion properties of slow neutrons would not be collimated but could reach the chambers laterally, where the screening in both cases is much less. Hence, if the 5 minute decay were slow neutron induced, it would be expected to be proportionately much higher on the Pensacola unless some local vagary of distribution of the neutron capturing material introduced a compensating effect. On the whole, this neutron hypothesis seems therefore unsatisfactory and a better explanation lies in assuming a tail of gamma-emitting fission products left behind by the ball of fire on the near-in ships.

In the BAKER records (Figs. 7, 7b) the initial burst of radiation analogous to that in ABLE is quite small in magnitude. In the case of the distant Carteret at 3200 yards the intensity falls rapidly as in ABLE to a low value at 40 - 50 seconds, rises steadily to a maximum at 5 minutes and then declines slowly.

It seems straight forward to explain the rise after the first minute and subsequent decay in terms of a high local concentration of fission products brought in the descending rain and in the rolling cloud of spray which spreads out from the base of the plume. These fission products then decay and remove themselves by settling into the sea and diffusing down through the sea water.

It is interesting to speculate on the meanings of the above-and below-waterline readings on the Carteret. The two records are closely similar in the shapes and times of their recorded maxima, the below-water line record not lasting so long nor rising so high and having about half the total dosage of the upper location record. The locations are almost vertically one above the other, about 40 feet and 5 steel decks apart. There is a flat deck a few feet above the upper location, so that it would be affected by deck contamination by something like an order of magnitude more than the lower. It seems likely, therefore, that ship contamination is not the main factor in the doses, but that a large proportion of it originates from fission products in the surrounding mist and on the water surface. The slight secondary maximum, on the underwater record after the main maximum, which is absent on the upper location record, is suggestive of some downward diffusion of the fission products through the water, past the unit.

The Crittenden instrumental record (1700 yds.) obtained in BAKER gives evidence of very strong vibrations lasting about ten seconds, the pen being in rapid motion and producing a series of dots. There is a similar weaker effect on the Carteret records starting at $\frac{1}{2}$ second. The underwater shock must have caused this and the small minimum on the Crittenden curve at $<\frac{1}{2}$ second is probably instrumental from the same cause. There appears also a marked oscillation on this curve at 70 seconds, corresponding to the expected time of arrival of the first water wave from the explosion.

By plotting the integral of the ABLE and BAKER curves up to time t as a percentage of the total integral (Fig. 9) one obtains a curve which shows the percentage reduction in dose resulting from dodging behind a strongly absorbing shield. About half the total dose is obtained in the first second in ABLE, so that very prompt action would be needed to reduce the dose of say 200 R at 1,500 yards in ABLE to 100 R. The strong shadow produced by the turrets on the Pensacola suggests that all round shielding is unnecessary, scattering being small.

In BAKER the time to half dose is much longer, varying from 20 minutes at 1,500 yards to seven minutes at 3,000 yards. Thus there is ample time for protective measures by ship personnel, but in this case, the radiation will be fairly isotropic, so that all-round screening would be required.

FIG. 1a: CIRCUIT DIAGRAM OF GAMMA RAY RECORDER UNIT.

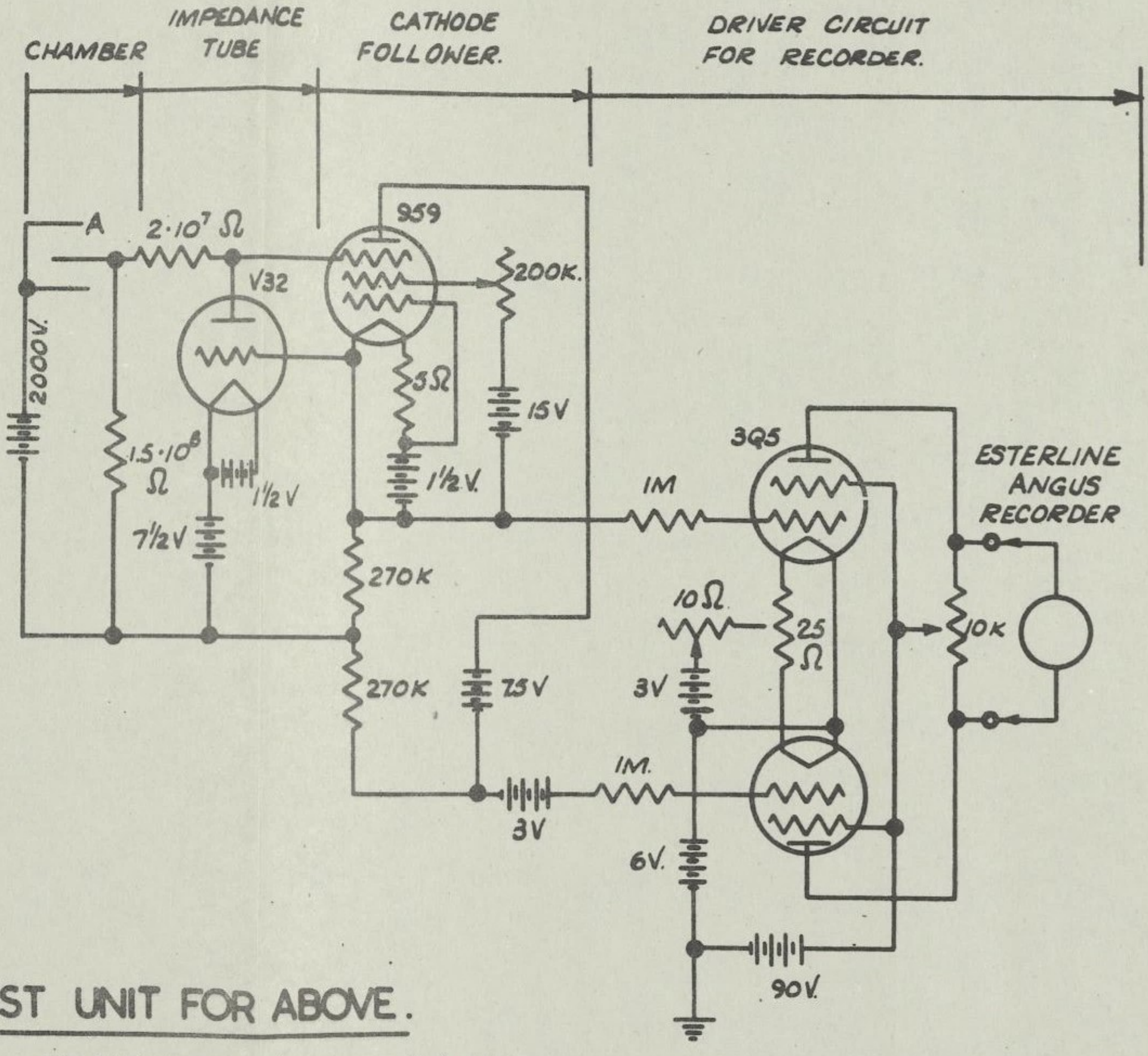

FIG. 1b: TEST UNIT FOR ABOVE.

BY MEANS OF THE METER "M" AND POTENTIOMETER "A", A SERIES OF VOLTAGES FROM 1 VOLT TO 250 VOLTS CAN BE APPLIED TO THE HIGH RESISTOR BANK R WHICH HAS A RANGE OF VALUES $2.5\cdot10^9 \rightarrow 10^7\Omega$.

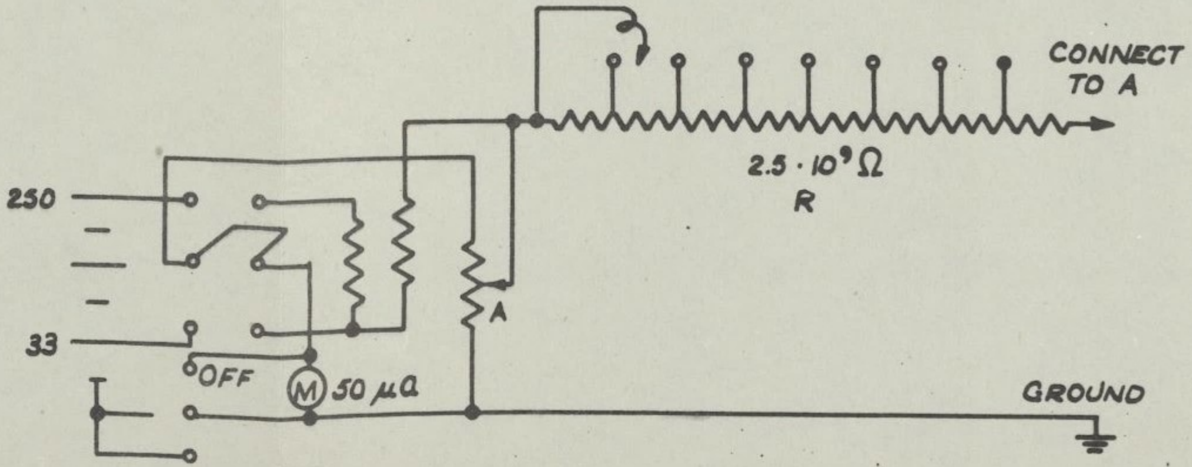

Fig. 2.

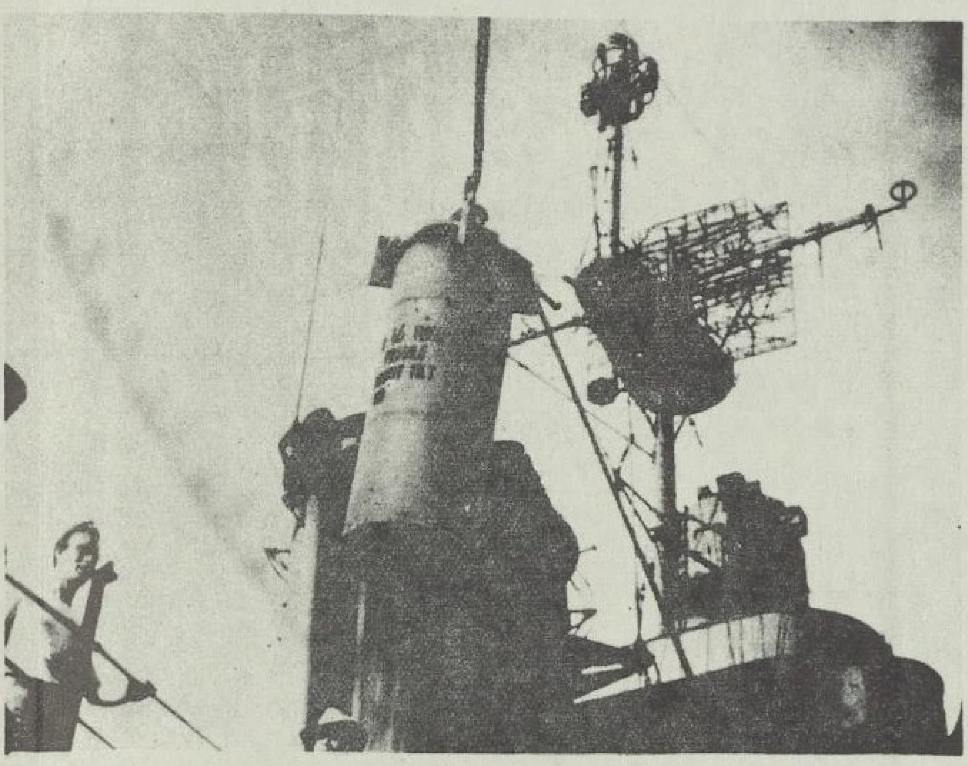

Loading on Pensacola

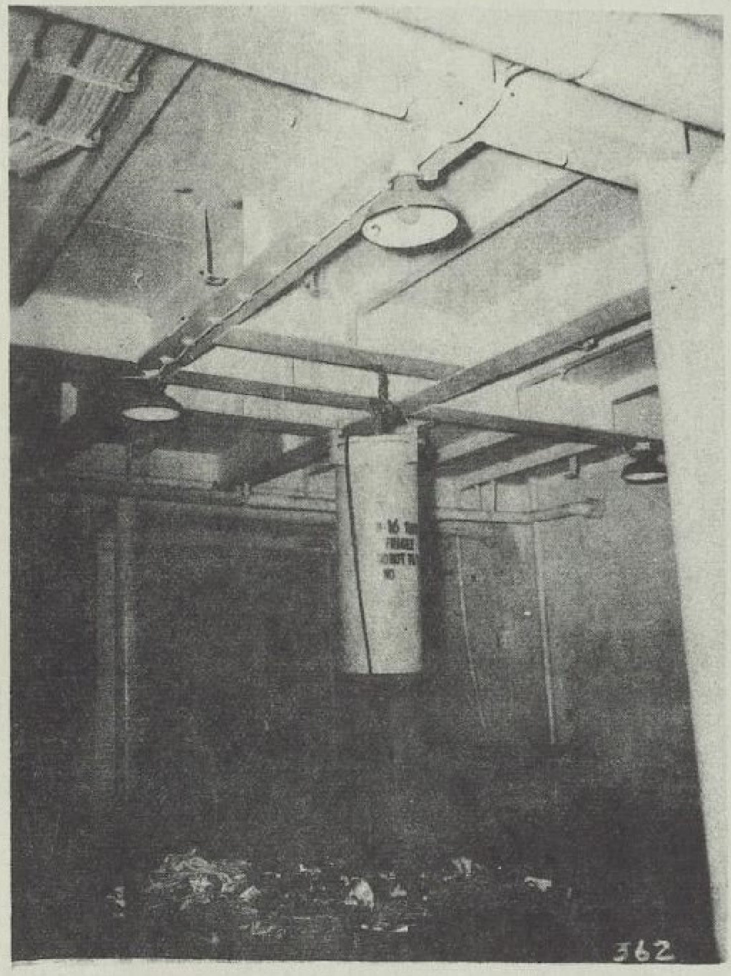

Installation in after troop compartment in A.P.A. 70 (Carteret)

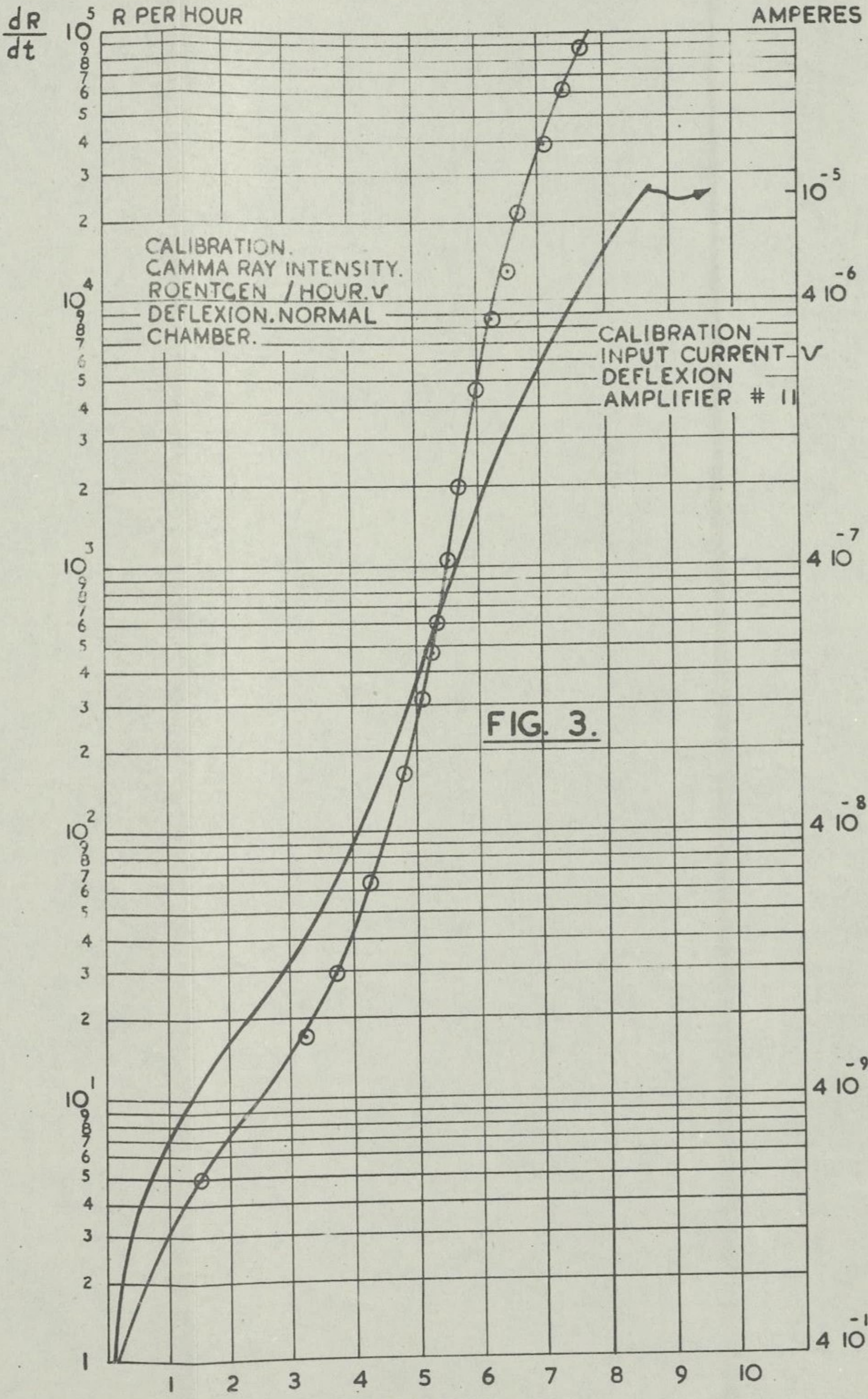
$\frac{dR}{dt}$
R PER HOUR
AMPERES
10^5
10^4
10^3
10^2
10^1
1
2
3
4
5
6
7
8
9
10^{-5}
$4\ 10^{-6}$
$4\ 10^{-7}$
$4\ 10^{-8}$
$4\ 10^{-9}$
$4\ 10^{-10}$
CALIBRATION.
GAMMA RAY INTENSITY.
ROENTGEN / HOUR. V
DEFLEXION. NORMAL
CHAMBER.
CALIBRATION
INPUT CURRENT- V
DEFLEXION
AMPLIFIER # 11
1
2
3
4
5
6
7
8
9
10
DEFLEXION.

FIG. 3.

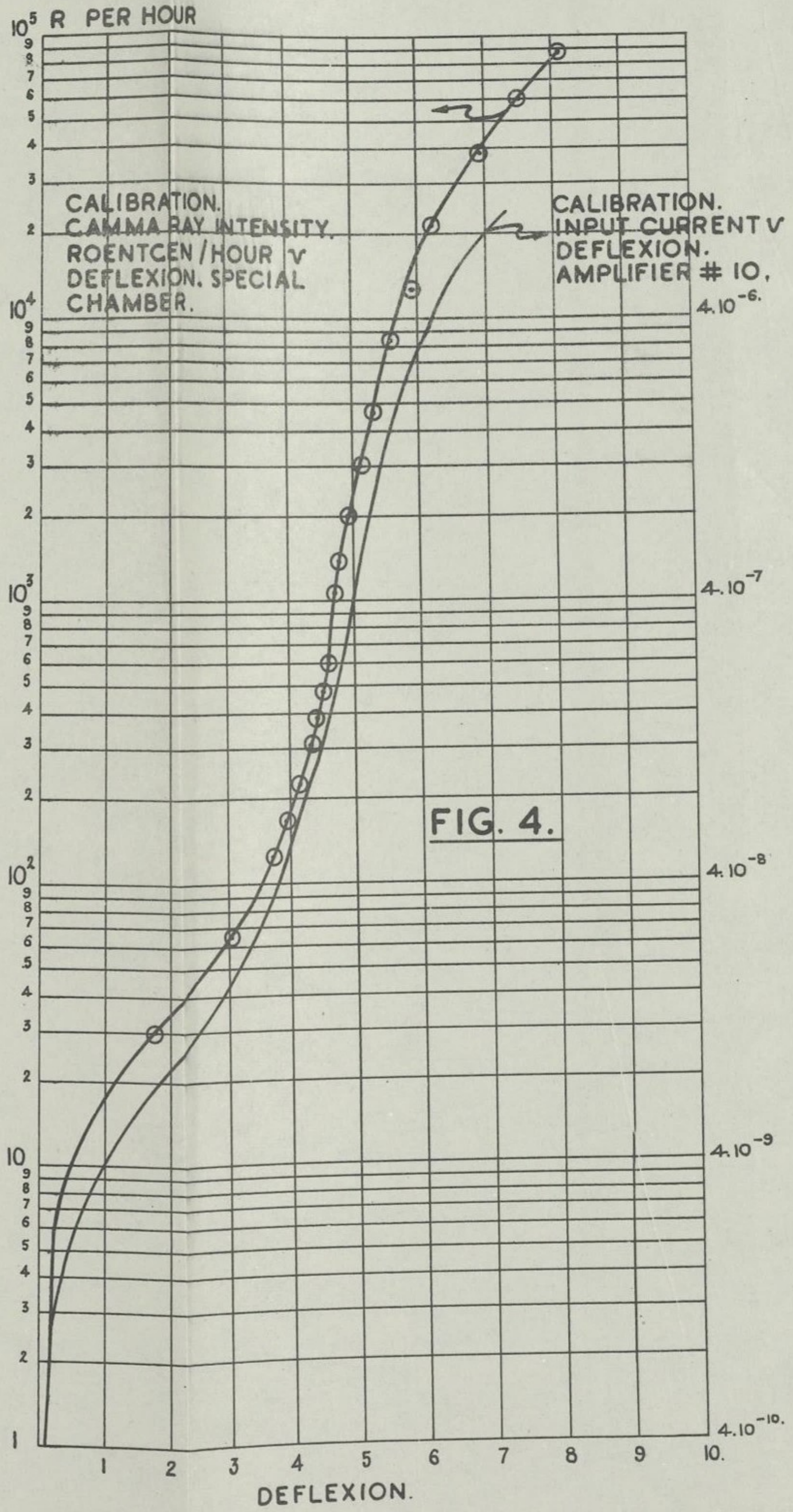
10^5 R PER HOUR
CALIBRATION.
GAMMA RAY INTENSITY.
ROENTGEN / HOUR V
DEFLEXION. SPECIAL
CHAMBER.
CALIBRATION.
INPUT CURRENT V
DEFLEXION.
AMPLIFIER # 10.
10^4
10^3
10^2
10
1
4.10^-6.
4.10^-7
4.10^-8
4.10^-9
4.10^-10.
1
2
3
4
5
6
7
8
9
10.
DEFLEXION.

FIG. 4.

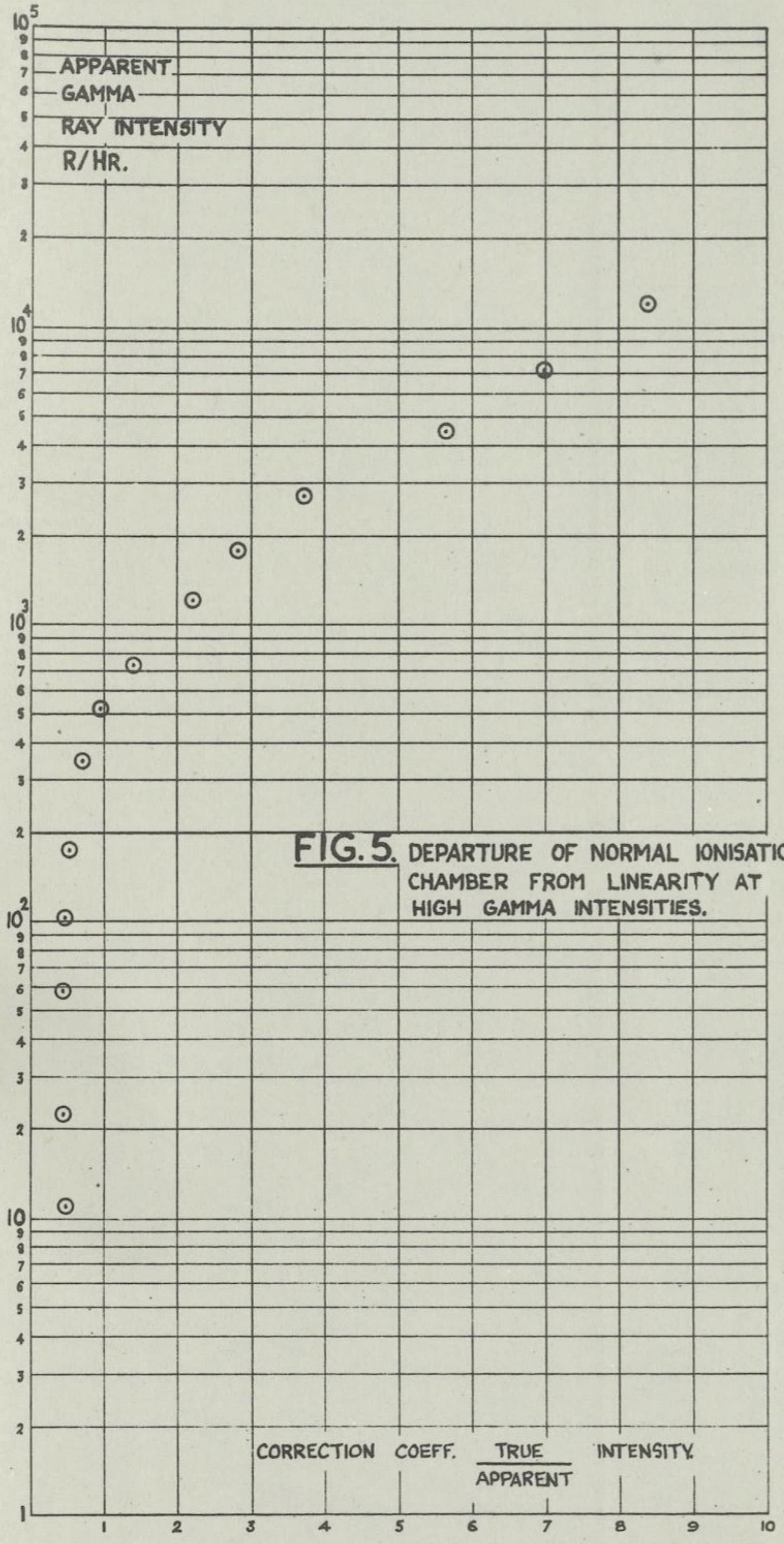

FIG. 5. DEPARTURE OF NORMAL IONISATION CHAMBER FROM LINEARITY AT HIGH GAMMA INTENSITIES.

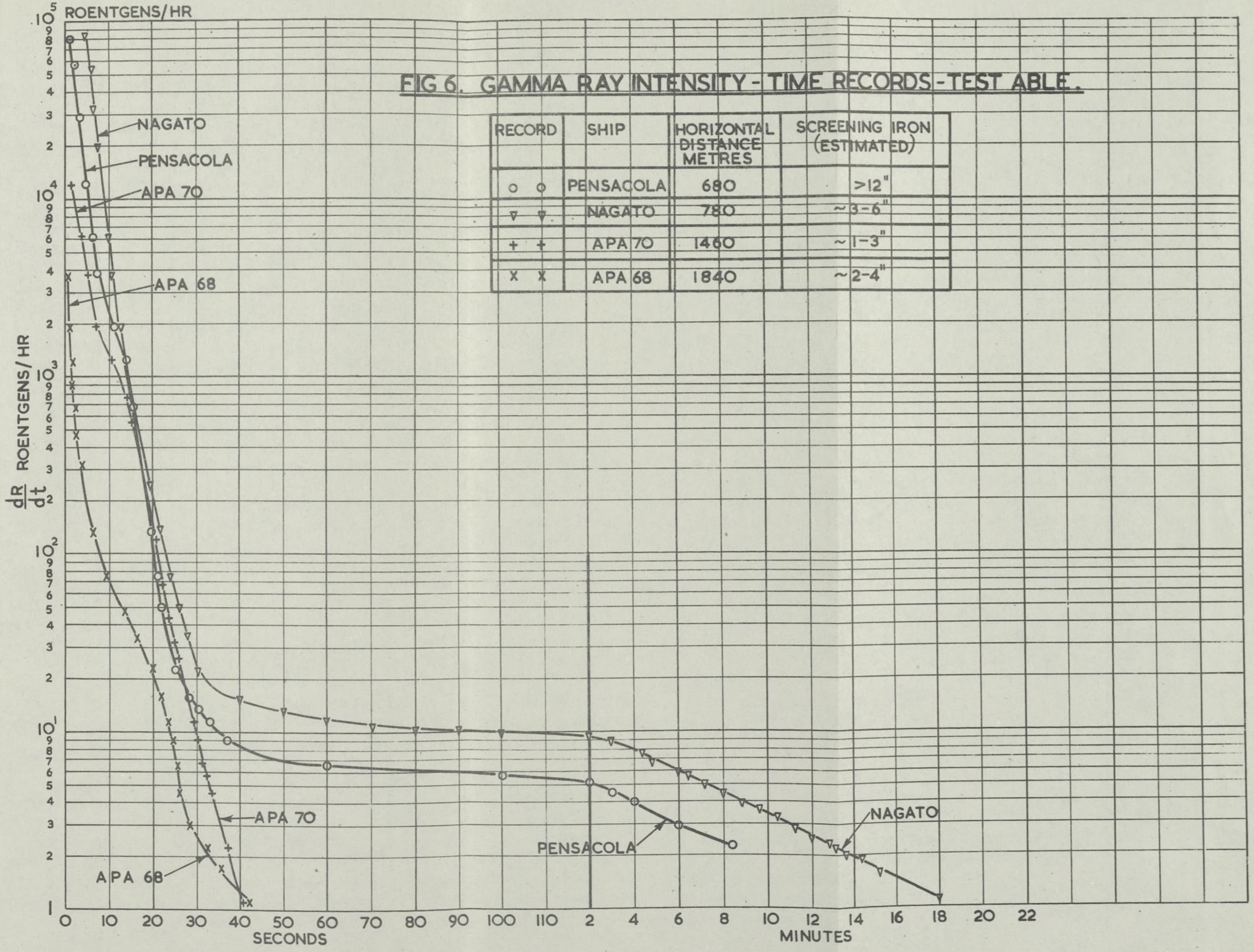

FIG 6. GAMMA RAY INTENSITY - TIME RECORDS - TEST ABLE.

RECORD	SHIP	HORIZONTAL DISTANCE METRES	SCREENING IRON (ESTIMATED)
○ ○	PENSACOLA	680	>12"
▽ ▽	NAGATO	780	~3-6"
+ +	APA 70	1460	~1-3"
x x	APA 68	1840	~2-4"

FIG 7. GAMMA RAY INTENSITY - TIME RECORDS - TEST BAKER.

RECORD	SHIP	HORIZONTAL DISTANCE (METRES)	SCREENING IRON (ESTIMATED)	LOCATION IN SHIP		
+ +	APA 77 CRITTENDEN	1370	1½"	# 1 DECK FORWARD TROOP HEAD	SPECIAL CHAMBER	
× ×	APA (CARTERET)	2740	1½"	# 1 DECK FORWARD TROOP HEAD TWIN INSTALLATION	× × SPECIAL CHAMBER	THESE SHOULD BE IDENTICAL
△ △	"	"	"	" "	△ △ NORMAL CHAMBER	
○ ○	APA 70 (CARTERET)	2740	3/8 HORIZONTAL + SEAWATER	FORWARD STORES 9' BELOW WATER LINE	NORMAL CHAMBER	

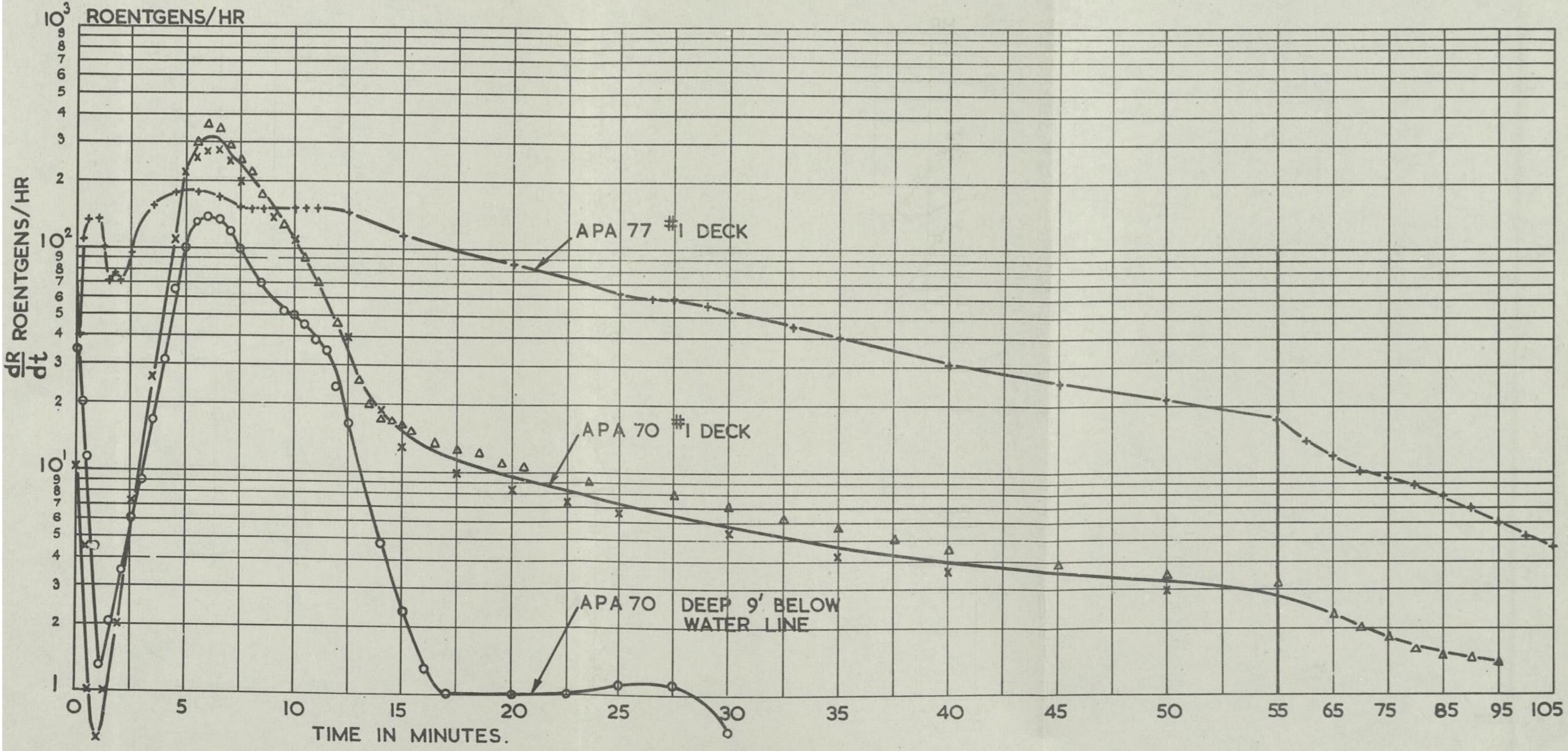

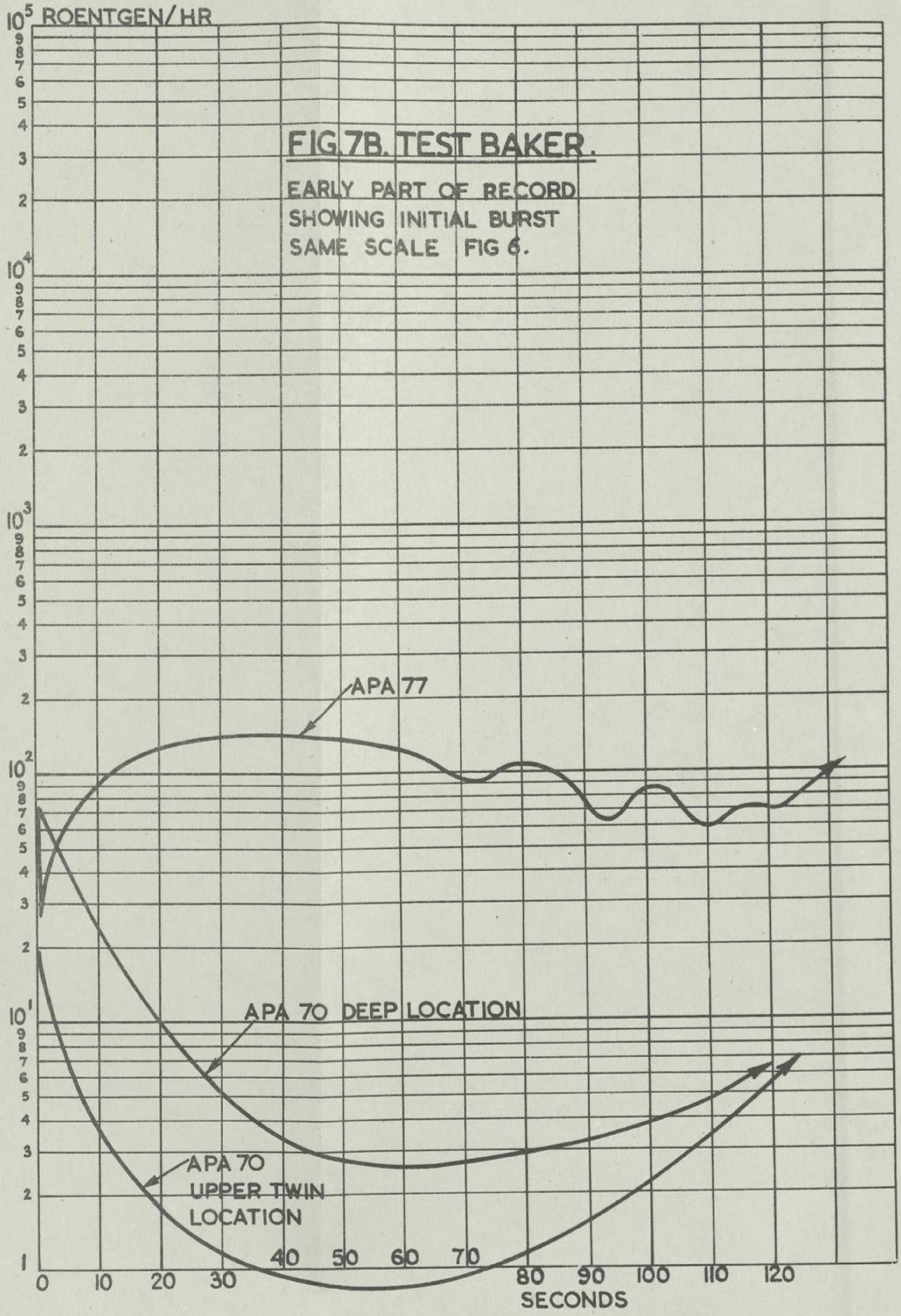

FIG. 7B. TEST BAKER.

EARLY PART OF RECORD
SHOWING INITIAL BURST
SAME SCALE FIG 6.

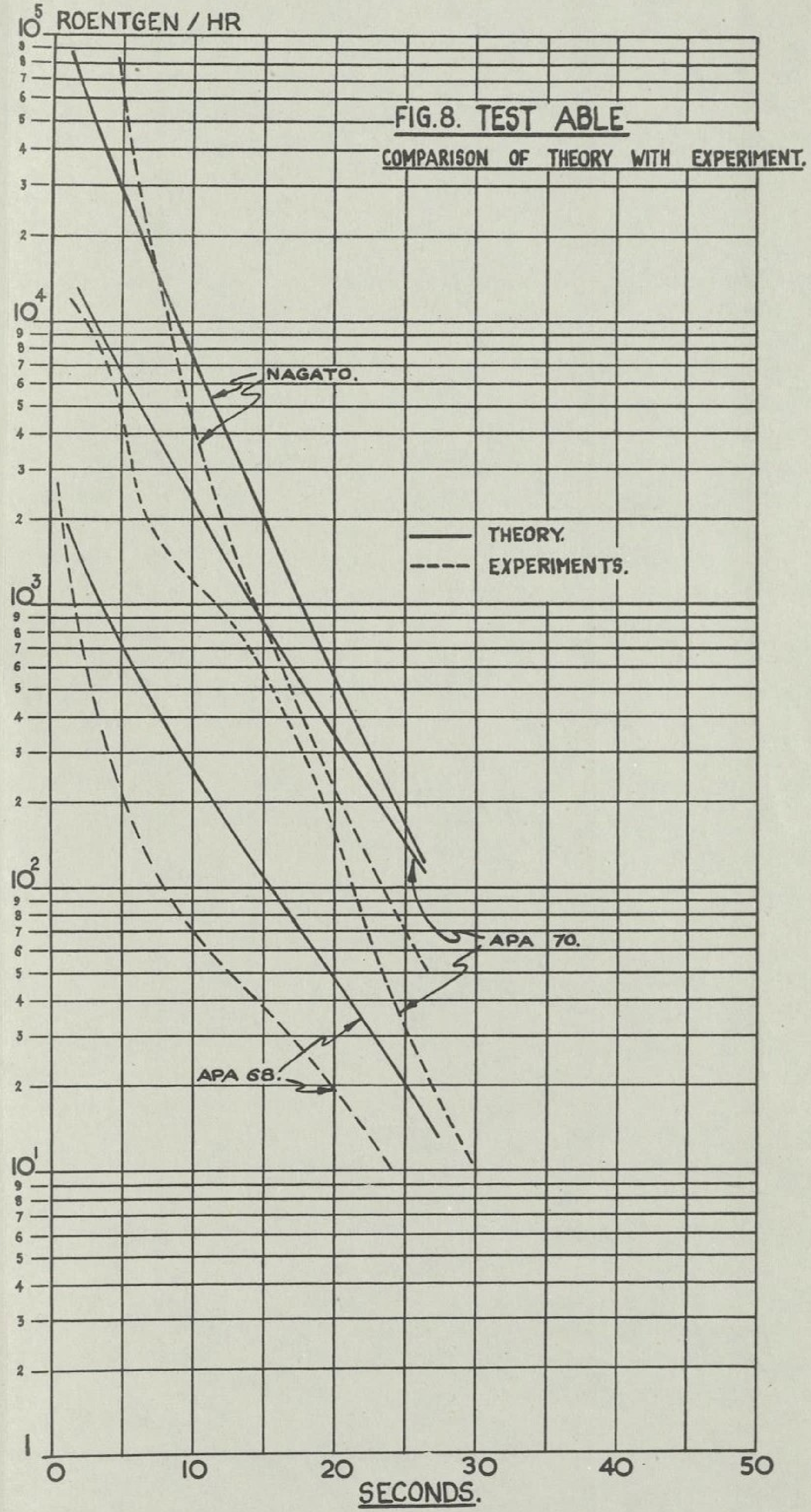

FIG. 8. TEST ABLE

COMPARISON OF THEORY WITH EXPERIMENT.

FIG.9. EVASIVE ACTION CURVE.

SHOWING % DOSE RECEIVED UP TO TIME "t" AFTER BURST

$$y = 100 \int_0^t I(t)\,dt \Big/ \int_0^\infty I(t)\,dt$$